KOENIG & BAUER

Lubricant dispenser

(electromechanical, battery powered)

we're on it.

Lubricant dispenser

(electromechanical, battery powered)

Your benefits at a glance:

- simple, self-explanatory operation
- reliable and precise lubricant dispensing, regardless of temperature and back pressure
- display of current operating condition by all-around visible LED signals as well as on the LCD display
- one-off acquisition costs for the lubricant dispenser drive and its system connection

- conversion of the existing lubricant dispenser to an automatic, time-pulse-controlled lubricant dispenser
- main drive pinion and ring gear of the turntable are supplied independently of temperature and reliably with the appropriate amount of grease
- a LCD display with adjustment button allows a quick and easy control of the settings directly on the lubricant dispenser
- the operating condition of the electromechanically driven lubricant dispenser is continuously monitored
- the operating status is indicated by all-round visible LED signals as well as on the LCD display

Characteristics

- easy conversion by replacing the conventional grease cartridge
- the retrofit can be done independently
- no special expertise required

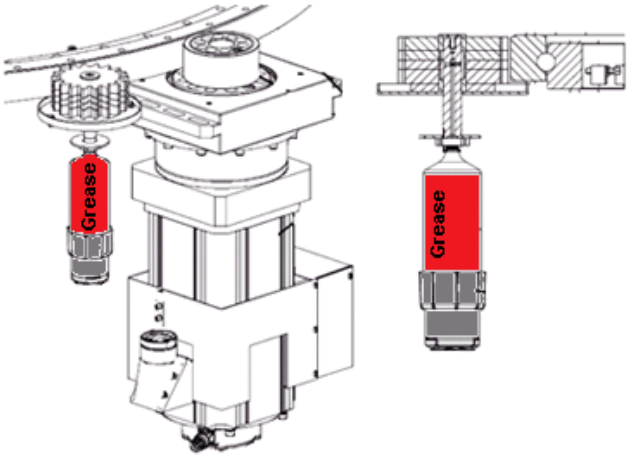

Koenig & Bauer Kammann